ROHS

www.gepu.tw

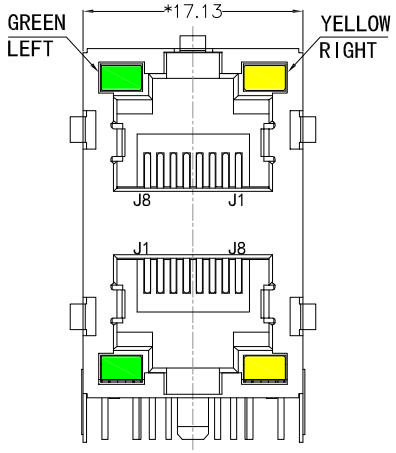

FRONT VIEW

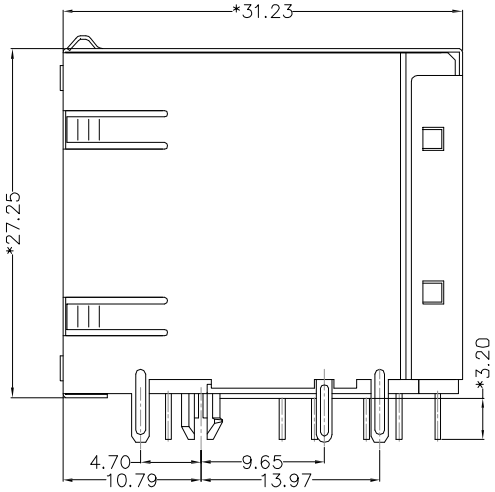

RIGHT SIDE VIEW

MATERIAL:

HOUSING: PBT,UL94V-0,BLACK.

TERMINAL: PHOSPHOR BRONZE Ø=0.46MM , G/FU" GOLD PLATING.

SHIELD: C2680,T=0.20MM,20 MIN NICKEL PLATING ON ALL AREA.

MACHANICAL:

DURABILITY: 750 CYCLES MIN,12.5MM/MINUTE.

INSERTION FORCE: 2.2KG.F MAX.

RETENTION STRENGTH : 7.7KG.F BETWEEN JACK AND PLUG.

OPERATING TEMPERATURE: -40 ℃～+85℃.

STORAGE TEMPERATURE: -40°C~+85°C.

ALL CRITICAL DIMENSIONS WITH "*"

ELECTRICAL:

VOLTAGE: 125 VOLTS AC.

CURRENT RATING : 1.5AMP.

DIELECTRIC STRENGTH: 1000 VAC RMS 50HZ OR 60HZ,1MIN.

INSULATION RESISTANCE: 500 MEGA OHMS MIN. INITIAL AFTER 500V DC FOR 1 MINUTE.

CONTACT RESISTANCE: SINGLE TERMINAL 30 MILLIOHMS MAX. INITIAL 50 MILLIOHMS MAX. AFTER DURABILITY TEST.

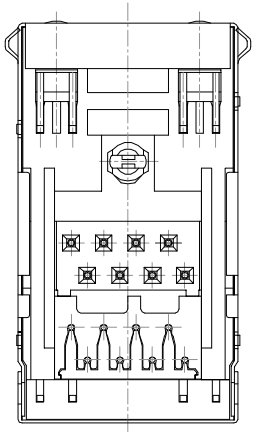

BOTTOM VIEW

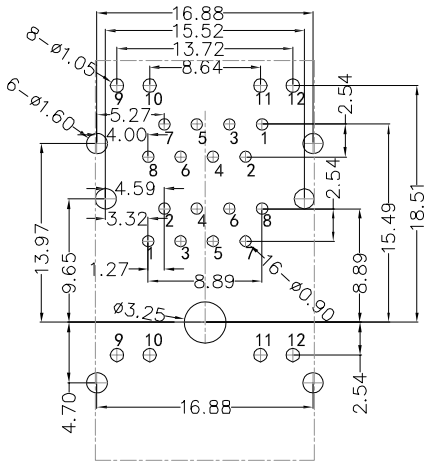

RECOMMENDED PCB LAYOUT
VIEWED FROM COMPONENT SIDE

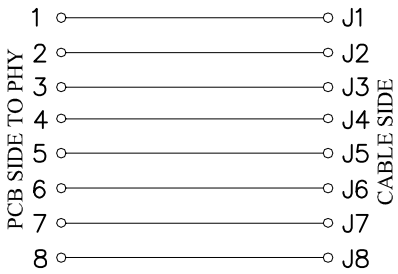

LED Specification

Standard LED Color	LED Wavelength	Foward(A)	Foward(V)
Green	568nm	20mA	1.85-2.45V
Yellow	585nm	20mA	1.7-2.2V

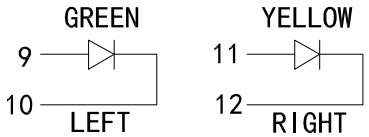

ECN NO.	REV.	DATE.	DESCRIPTION.	CHANGE.	CHECK.	APPRO.
	A		NEW			

APPROVALS		DATE
DRAWN	ZHIWEI.CHEN	2015.07.07
CHECKED		
APPROVALS		

TOLERANCES ARE: 30~以上 ±0.30; 10~30 ±0.20; 5~10 ±0.15; ~ 5 ±0.10; ANGLE ±2°

GEPU 歌普

TITLE: RJ45 2X1

PART NO. RJ45-6W21-DDGY-AB-88-B1

UNIT: mm | SCALE: 1:1 | PROJ:

DRAWING NO. | SHEET 1 OF 1