ROHS

www.gepu.tw

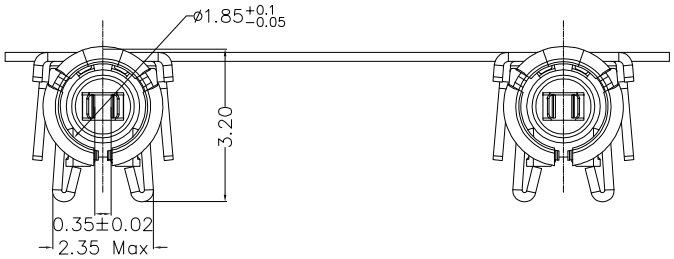

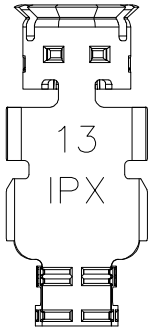

Mark Position

NOTE:

1. MATERIAL:
   Housing:THERMOPLASTIC PA66,Color:Black,UL 94V-0
   Contact:Copper Alloy,T=0.1MM
   0.127~0.20um Gold Plating on Contact area Over Nickel Plated;
   Shell:Copper Alloy,T=0.2mm
   0.0508~0.127um Gold Plating on Contact area Over Nickel Plated;
2. PRODUCT PERFORMANCE:
   Termination Resistance:20MΩ Max
   Dielectric Withstanding Voltage:200V AC,1 Minute
   Insulation Resistance:500MΩ Min
   DurabilitY:30 Cycles Min

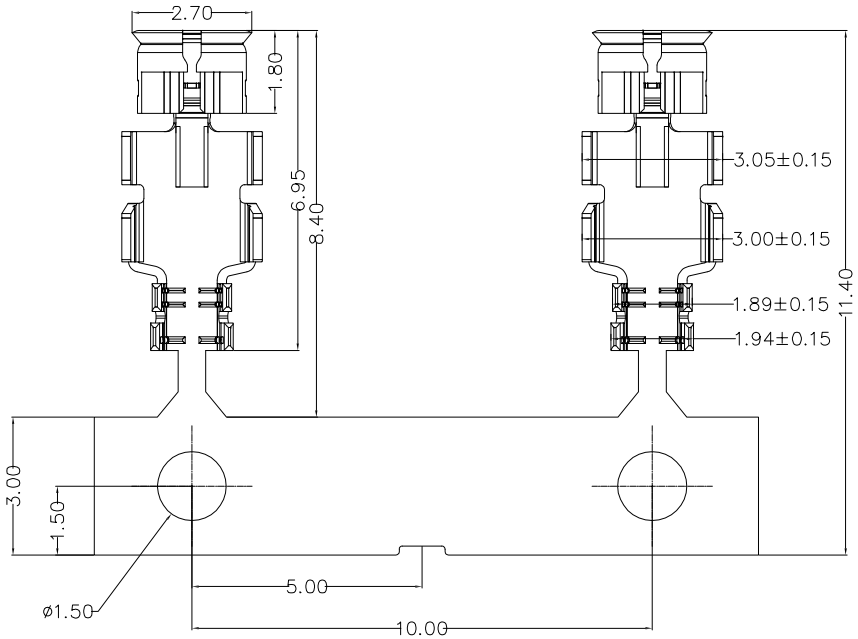

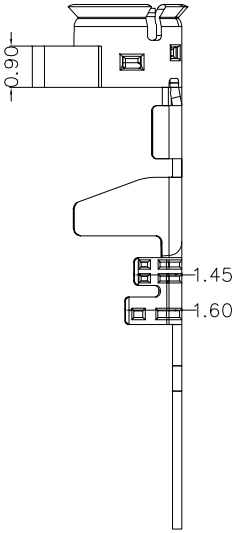

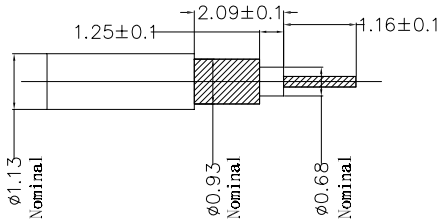

Applicable Cable Nominal Dimension

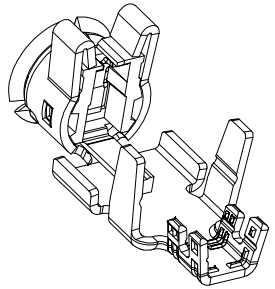

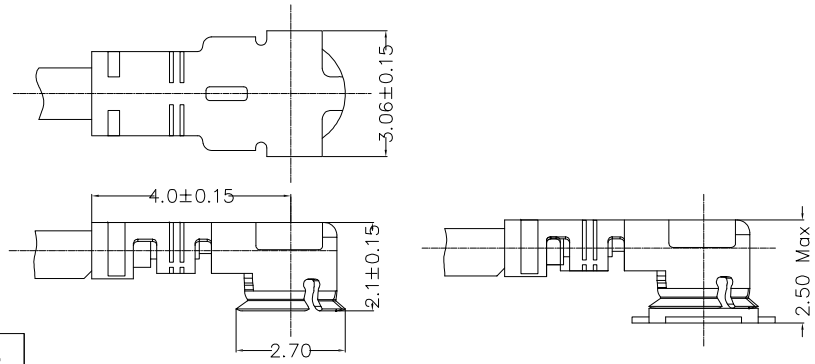

INFORMATIONS OF THE PACKING

PART NUMBER	Q`TY/REEL
GP-1B-E-01	2500PCS

APPROVALS		DATE
DRAWN	ZHIWEI.CHEN	2015.07.07
CHECKED		
APPROVALS		

GEPU歌普

TOLERANCES ARE			ANGLE
30~以上	±0.30		
10~30	±0.20		
5~10	±0.15		±2°
~ 5	±0.10		

TITLE:	一代线端
PART NO.	GP-1B-E-01
UNIT: mm	SCALE: 1:1
DRAWING NO.	———
PROJ:	SHEET 1 OF 1

ECN NO.	REV.	DATE.	DESCRIPTION.	CHANGE.	CHECK.	APPRO.
———	A	———	NEW	———	———	———